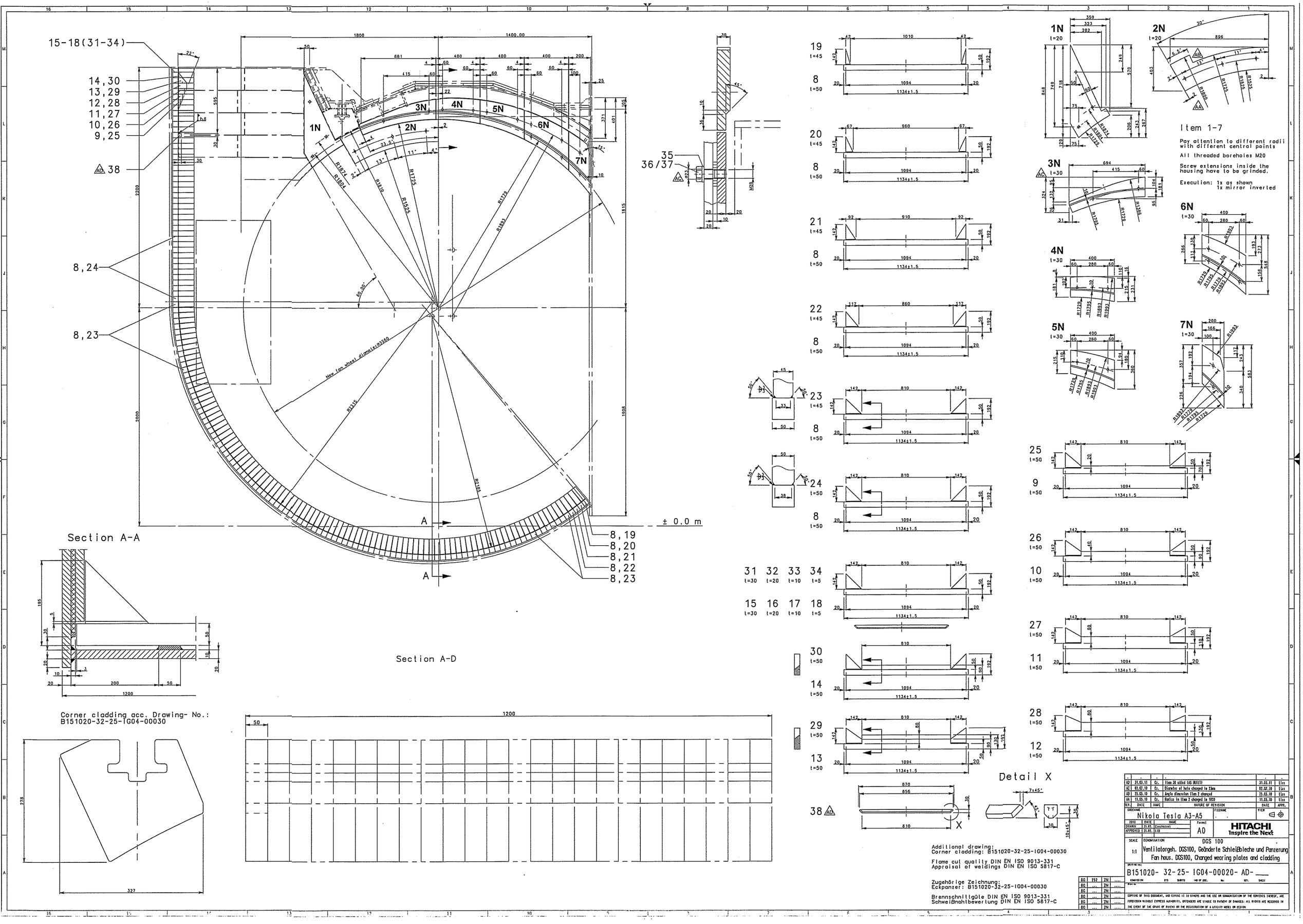

15-18(31-34)
14,30
13,29
12,28
11,27
10,26
9,25
38
8,24
8,23
1N
2N
3N
4N
5N
6N
7N
8,19
8,20
8,21
8,22
8,23
± 0.0 m
Section A-A
Section A-D
Corner cladding acc. Drawing- No.:
B151020-32-25-IG04-00030
Item 1-7
Pay attention to different radii with different central points
All threaded boreholes M20
Screw extensions inside the housing have to be grinded.
Execution: 1x as shown
1x mirror inverted
Detail X
Additional drawing:
Corner cladding: B151020-32-25-IG04-00030
Flame cut quality DIN EN ISO 9013-331
Appraisal of weldings DIN EN ISO 5817-C
Zugehörige Zeichnung:
Eckpanzer: B151020-32-25-IG04-00030
Brennschnittgüte DIN EN ISO 9013-331
Schweißnahtbewertung DIN EN ISO 5817-C
Nikola Tesla A3-A5
A0
HITACHI
Inspire the Next
DGS 100
1:1
Ventilatorgeh. DGS100, Geänderte Schleißbleche und Panzerung
Fan hous. DGS100, Changed wearing plates and cladding
B151020- 32-25- IG04-00020- AD-